10-24026 pump F8B-903

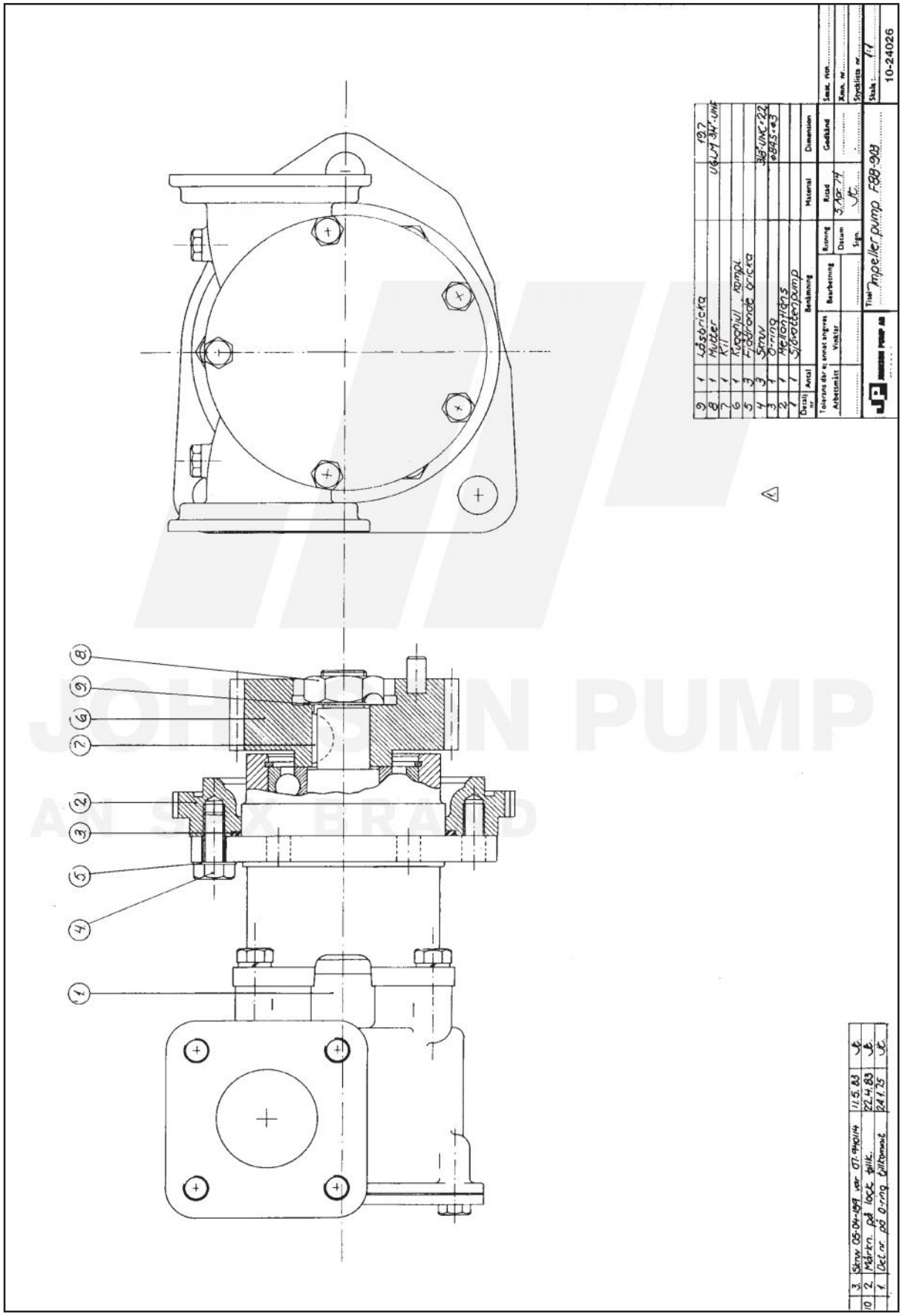

The product, i.e. concept, design and construction, is the property of SPX Johnson Pump Marine AB